FL6003 Smart Flow Sensor Stainless Steel Housing Seal Plus structure Connection: Internal thread M18 x 1.5 Programmable M12 socket	
Applications	Liquid and gas
Electric design	DC Relay
Supply voltage[V]	20…36 DC
Output	NO / NC
Reverse polarity protection	Yes
Max. overload current[mA]	<80
Max. temperature drift[K/min]	300
Pressure resistance[bar]	300
Liquid setting range[cm/S]	3…300
Max sensitivity of range for liquid[cm/S]	3…60
Gas setting range[cm/S]	200…3000
Max sensitivity of range for gas[cm/S]	200…800
Startup time[s]	< 8
Output response time[s]	< 2
Ambient temperature[℃/℉]	-25…80/-13...176
Environment temperature[℃/℉]	-25…80/-13...176
Storage temperature[℃/℉]	-25…100/-13…212
Protection/Enclosure Rating	IP68
ESD EN61000-4-2	6kV-CD / 8kV-AD
EFT EN61000-4-4	2kV
Surge immunity test EN61000-4-5	1kV
Shock resistance[g]	50
Vibration resistance[g]	20
Upper cover material	Stainless steel316L
Lower cover material	Stainless steel 304
Probe material/Wetted Parts	Stainless steel316L
Connection	M12 socket

Dimensions[mm]	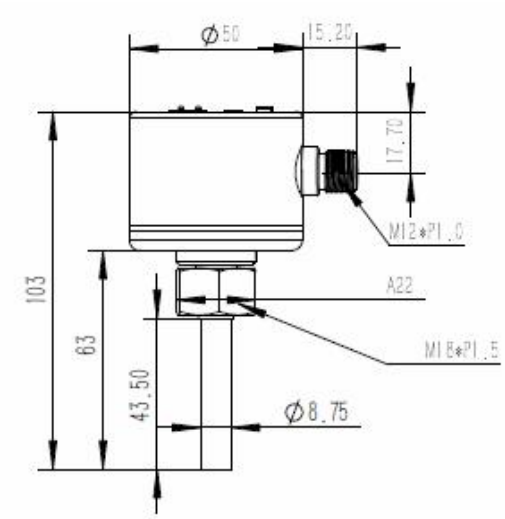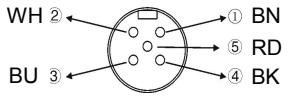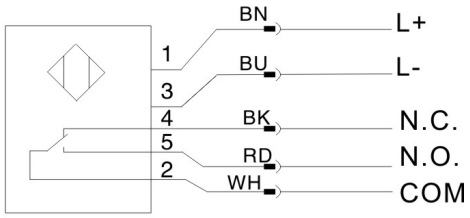
Wiring Core color