ViewMarq 1-Line Message Displays

Description

ViewMarq models MD4-0112T and MD4-0124T are 1-line, tri-color, 2-inch maximum character size LED message displays. Model MD4-0112T is a 1-line x 12 character display. Model MD4-0124T is a 1-line x 24 character display. Each supports red, amber and green characters, embedded string and numeric variables and scrolling (right, left, up and down). There are (1) RS-232 port, (1) RS-485 port and (1) 10/100 BaseT Ethernet port for configuration and external message control. They support serial ASCII, Modbus RTU, and Modbus TCP protocols. The extruded aluminum housing is NEMA 4 / NEMA 12 (Indoor only) rated. They are UL 508 listed and CE marked. Included are wall mount and chain mount bracket assemblies, 1/2 and 3/4 inch cable glands for input wiring and one seven foot Ethernet patch cable. The required configuration software (MD-PGMSW) can be downloaded for free or purchased on CD.

MD4-0112T

$553.00

MD4-0124T

$765.00

file E157382

Features

- Low power consumption, high-efficiency switch mode power supply
- Wall mount / cabinet top mount and chain mount - brackets included.
- Free, easy-to-use configuration software package
- The display is fully configurable through the ViewMarq software for ease of use.
- Messages can be sent by an ASCII serial string or through Modbus RTU or Modbus TCP.
- Serial RS-232/485 and Ethernet Modbus TCP communications can be used at the same time.
- Store and trigger up to 200 messages

Dimensions

Units: inches [mm]

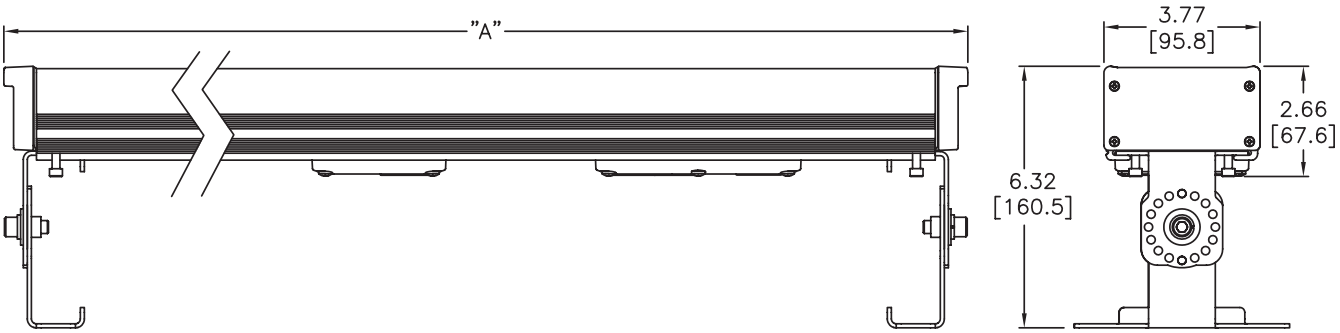

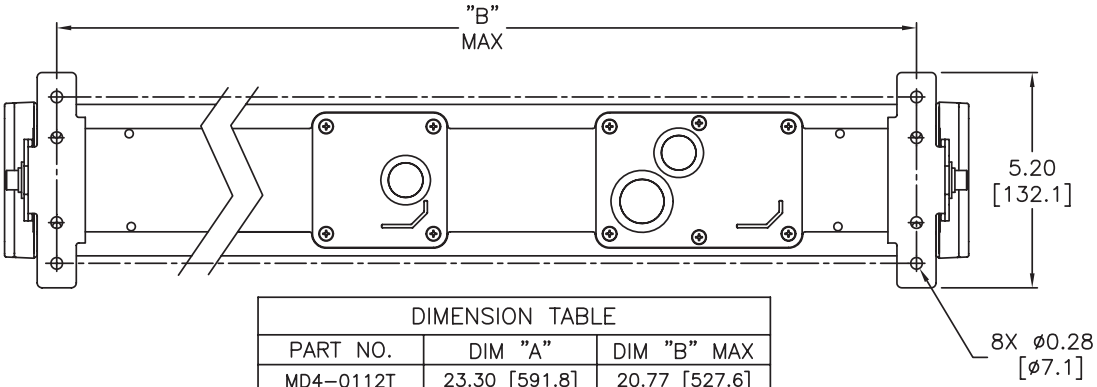

DIMENSION TABLE		
PART NO.	DIM "A"	DIM "B" MAX
MD4–0112T	23.30 [591.8]	20.77 [527.6]
MD4–0124T	44.89 [1140.2]	42.38 [1076.5]

ViewMarq Message Displays Specifications

ViewMarq 1-Line Message Displays Specifications		
Part Number	MD4-0112T	MD4-0124T
Description	1 Line X 12 Characters	1 Line X 24 Characters
Display		
• Type	LED matrix: Tri-color (Green, Red, Amber)	
• LED Life	100,000 hours	
• LED Pitch	0.19 in [5 mm]	
• Center to Center Spacing of each LED	0.27 in [7 mm]	
• Number of Lines	1 (Based on 5 x 7 pixel sized characters)	
• Text Height	1.25 in, 2 in (Depends on character set selected)	
• Character Set	Printable ASCII	
• Approximate Viewing Distance	100 ft	
AC Electrical		
• Input Voltage	100-240 VAC (+10% / -15%), 50 / 60 Hz	
• Maximum Current	0.5A	0.8A
• Power Consumption (MAX)	22W	38W
• Maximum Inrush Current (Cold and Hot)	25A	26A
• Input Fuse Protection (Internal)	Yes (not user replaceable)	
• Output Protection for Overcurrent, Over Voltage and Over Temperature	Yes – Self Resetting	
• Insulation Resistance	> 10 MOhms @ 500 VAC	
DC Electrical		
• Input Voltage	24 VDC (+10% / -15%)	
• Maximum Current	1A	1.5A
• Maximum Inrush Current (Cold and Hot)	3A	4.5A
• Input Fuse Protection (Internal)	Yes (not user replaceable)	
• Reverse Polarity Protection	Yes	
Communication		
• Serial Communications	Serial RS-232, RS-485 both ASCII and Modbus, 2400 – 38.4KB - Slave only	
• Ethernet Communications	Modbus TCP, 10/100BaseT - Server only	
Dimensions / Weight		
• Enclosure Approximate Weight	4.9 lbs [2.2 kg]	9.0 lbs [4.1 kg]
Environmental		
• Storage Temperature	–30 to +85 °C (–22 to +185 °F)	
• Operating Ambient Temperature	0 to 60 °C (32 to +140 °F)	
• Non-Condensing Humidity	5 – 95% non-condensing	
• Altitude	Up to 2000 meters (6562 ft.)	
• Enclosure Ratings	UL Rated: Enclosure Type 1, Indoor Use, Dry Locations, NEMA 12 indoor only*, NEMA 4 indoor only*	
• Vibration	IEC 60068-2-6 (Test Fc)	
• Shock	IEC 60068-2-27 (Test Ea)	
• Noise Immunity	EN61131-2:2007	
• Agency Approvals	UL508 (E157382), NEMA 4, NEMA 12, RoHS, REACH CE (EN61131-2:2007) - Pollution Degree 2, Overvoltage Category II	

** Not evaluated by UL*

ViewMarq Message Displays

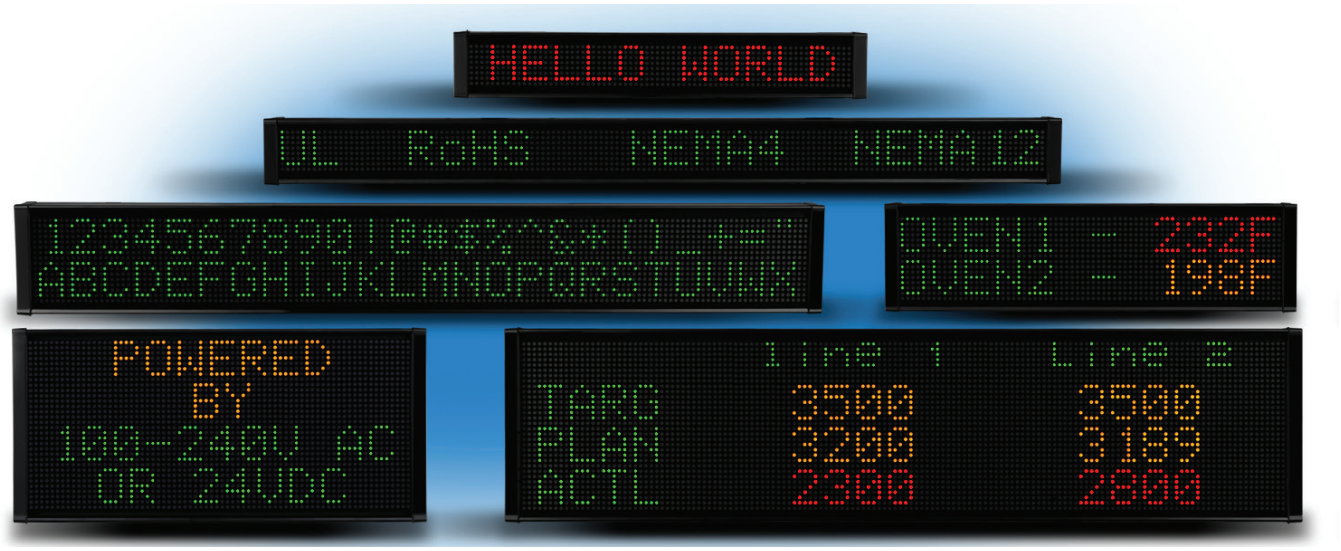

Overview

ViewMarq is an LED Message Display utilizing the latest LED and communications technologies for industry. It utilizes both serial and Ethernet communications. The display can be connected to a PLC or any device capable of sending serial ASCII, Modbus RTU, or Modbus TCP communications. It can accept commands over Modbus and Modbus TCP, or serial ASCII.

Applications

The ViewMarq is used to display real time factory floor data or to display PLC triggered messages. The message display is controlled by any of the following:

- ASCII input strings through the RS-232 or RS-485 port
- Modbus RTU messages through the RS-232 or RS-485 port
- Modbus TCP messages through the Ethernet port

Features

- Low power consumption, high-efficiency switch mode power supply
- Wall mount / cabinet top mount and chain mount - brackets included
- Free, easy-to-use configuration software package
- The display is fully configurable through the ViewMarq software for ease of use.
- Messages can be sent by an ASCII serial string or through Modbus RTU or Modbus TCP
- Store and trigger up to 200 messages

Compliances

- UL508, file number E157382
- CE
- NEMA 12 - Indoor use
- NEMA 4 - Indoor use
- RoHS

ViewMarq Message Display Mounting Options

Mounting Options

Two sets of mounting brackets are included with each ViewMarq Message display.

ViewMarq LED Display Mounting Specifications			
Part Numbers	***Weight***	***Weight with Wall Mount Brackets***	***Weight with Chain Mount Brackets***
MD4-0112T	4.9 lbs (2.2 kg)	6.1 lbs (2.8 kg)	5.4 lbs (2.5 kg)
MD4-0124T	9.0 lbs (4.1 kg)	10.2 lbs (4.6 kg)	9.6 lbs (4.4 kg)
MD4-0212T	7.3 lbs (3.3 kg)	8.5 lbs (3.9 kg)	7.8 lbs (3.5 kg)
MD4-0224T	13.1 lbs (6.0 kg)	14.3 lbs (6.5 kg)	13.6 lbs (6.2 kg)
MD4-0412T	12.1 lbs (5.5 kg)	13.3 lbs (6.0 kg)	12.6 lbs (5.7 kg)
MD4-0424T	22.5 lbs (10.2 kg)	23.7 lbs (10.8 kg)	23.0 lbs (10.5 kg)

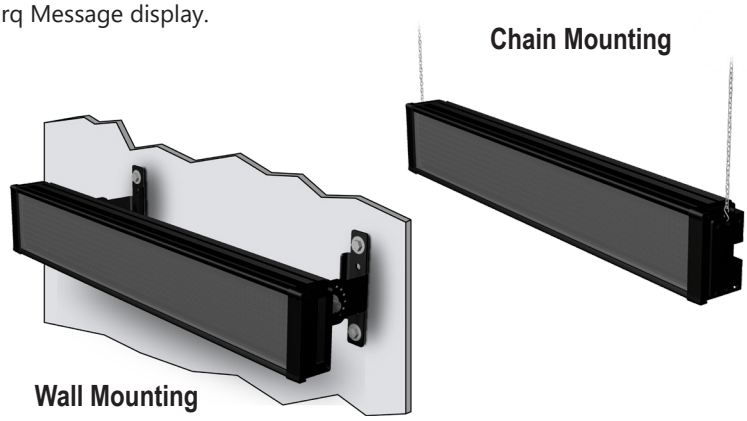

Viewing Angle

The ViewMarq display should be mounted for the optimum viewing angle.

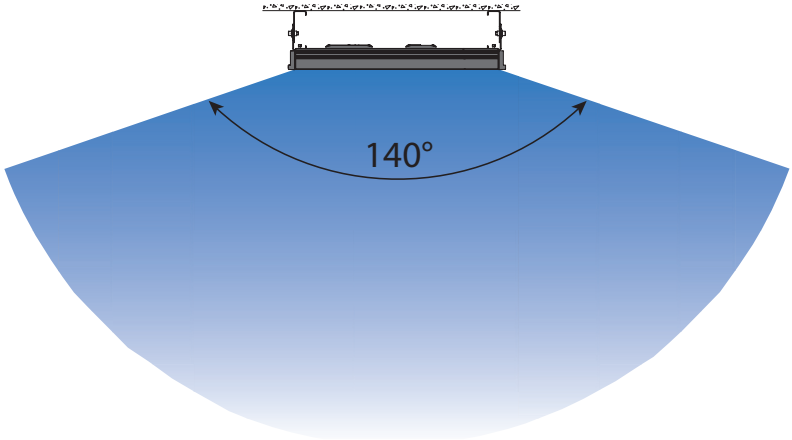

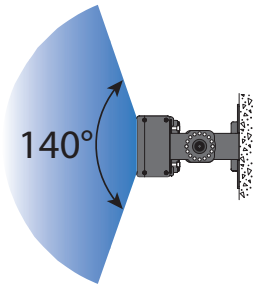

Viewing Distances

ViewMarq Message Displays Viewing Distances			
Part Numbers	***Font Size***	***Minimum Recommended Viewing Distance***	***Maximum Recommended Viewing Distance***
MD4-0112T ***MD4-0124T*** ***MD4-0212T*** ***MD4-0224T*** ***MD4-0412T*** ***MD4-0424T***	1-1/4 in	6 ft (1.8m)	60 ft (18m)
MD4-0112T ***MD4-0124T*** ***MD4-0212T*** ***MD4-0224T*** ***MD4-0412T*** ***MD4-0424T***	2 in	10 ft (3.0m)	100 ft (31m)
MD4-0212T ***MD4-0224T*** ***MD4-0412T*** ***MD4-0424T***	4 in	20 ft (6.1m)	200 ft (61m)
MD4-0412T ***MD4-0424T***	6 in	20 ft (6.1m)	300 ft (91m)
MD4-0412T ***MD4-0424T***	8 in	20 ft (6.1m)	400 ft (122m)
MD4-0412T ***MD4-0424T***	10 in	20 ft (6.1m)	500 ft (152m)

ViewMarq Message Display Replacement Parts

The optional replacement parts can be used to replace damaged, worn or lost ViewMarq message display components.

Replacement parts at a glance:

ViewMarq Message Display Replacement Parts		
Part Number	***Description***	***Price***
MD-BRK-1	ViewMarq wall mounting bracket assembly, replacement. Package of 2. For use with ViewMarq message display.	$43.00
MD-BRK-2	ViewMarq chain mounting brackets, replacement. Package of 2. For use with ViewMarq message display.	$19.50
MD-TERM-SET	ViewMarq pluggable terminal block set, replacement. For use with ViewMarq message display. Includes (1) 2-pole DC power connector, (1) 3-pole AC power connector, (1) 10-pole discrete input connector, and (1) 6-pole serial communications connector.	$18.75
MD-PWR-COV	ViewMarq power connection cover, replacement. For use with ViewMarq message display. (1) cover and (1) 1/2in NPT cable gland included.	$44.00
MD-COM-COV	ViewMarq communications cover, replacement. For use with ViewMarq message display. (1) cover and (2) 1/2in NPT cable gland and (1) 3/4in NPT cable gland with 6mm and 10mm hole plugs included.	$18.75

Wall Mount Bracket
Part No. MD-BRK-1

Chain Mount Brackets
Part No. MD-BRK-2

Terminal Block Set
Part No. MD-TERM-SET

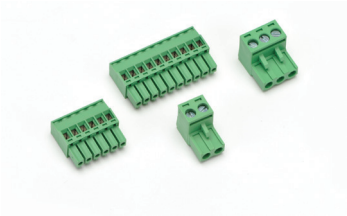

Power Back Cover w/ Cable Gland
Part No. MD-PWR-COV

Communication Back Cover w/ Cable Glands
Part No. MD-COM-COV

ViewMarq Message Display Configuration Software

Free Software!
Part Number: MD-PGMSW

ViewMarq LED message display Windows-based configuration software. Requires Windows XP (Service Pack 3), Vista, Windows 7 (32 and 64-bit) or Windows 8 (32 and 64-bit). Requires serial or Ethernet connection to the ViewMarq display. Available for purchase on CD or can be downloaded for free from AutomationDirect Web site. Ethernet cable ships with display.

COPYRIGHT © 2013 WWW.AUTOMATIONDIRECT.COM, ALL RIGHTS RESERVED.

Built-in Message Simulator

- Runs the message on your PC as you type.
- Test all of your messages before downloading
- Time savings saves you money!

Simple Message Creation

- Message creation and editing is made simple and fast with inutitive software. Easy-to-find tools help change the character color, add blinking, and insert embedded variables.

Text Editor

- Simple and intuitive text message creation, editing and formatting.

Command String Viewer

- Allows you to copy and paste the command string needed for your PLC ladder code.

Message Lists

- Create message lists that can be downloaded to the LED Display and triggered by a PLC or by discrete inputs.

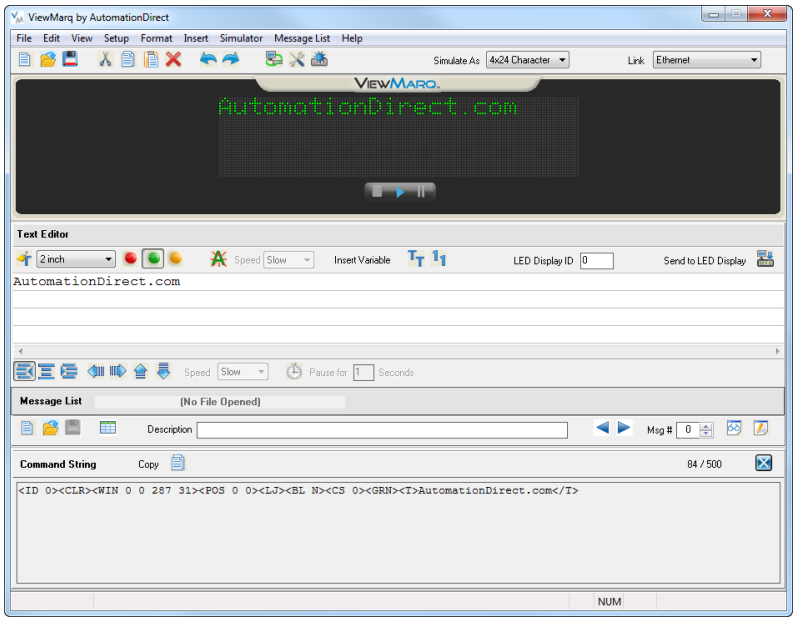

PC Requirements

- Personal Computer with a 333 MHz or higher processor (CPU) clock speed recommended; Intel® Pentium/Celeron family, or AMD® K6/Athlon/Duron family, or compatible processor recommended
- Keyboard and Mouse or compatible pointing device
- XVGA color video adapter and monitor with at least 1024 x 768 pixels required, 64K color minimum
- 50 MB free hard-disk space
- 512 MB free RAM
- CD-ROM or DVD drive if installing software from the CD
- Serial Port or Ethernet 10/100 Mbps port for configuring LED Display
- Operating System - Windows XP SP3, Windows Vista, Windows 7, Windows 8

Download the Software!

The Viewmarq Configuration Software can be downloaded at no charge from the AutomationDirect Web site, or a CD version may be purchased for $10 by ordering p/n MD-PGMSW. Help files are included in the software.